YOYO - PENDANT

Design: C.F. Møller Architects

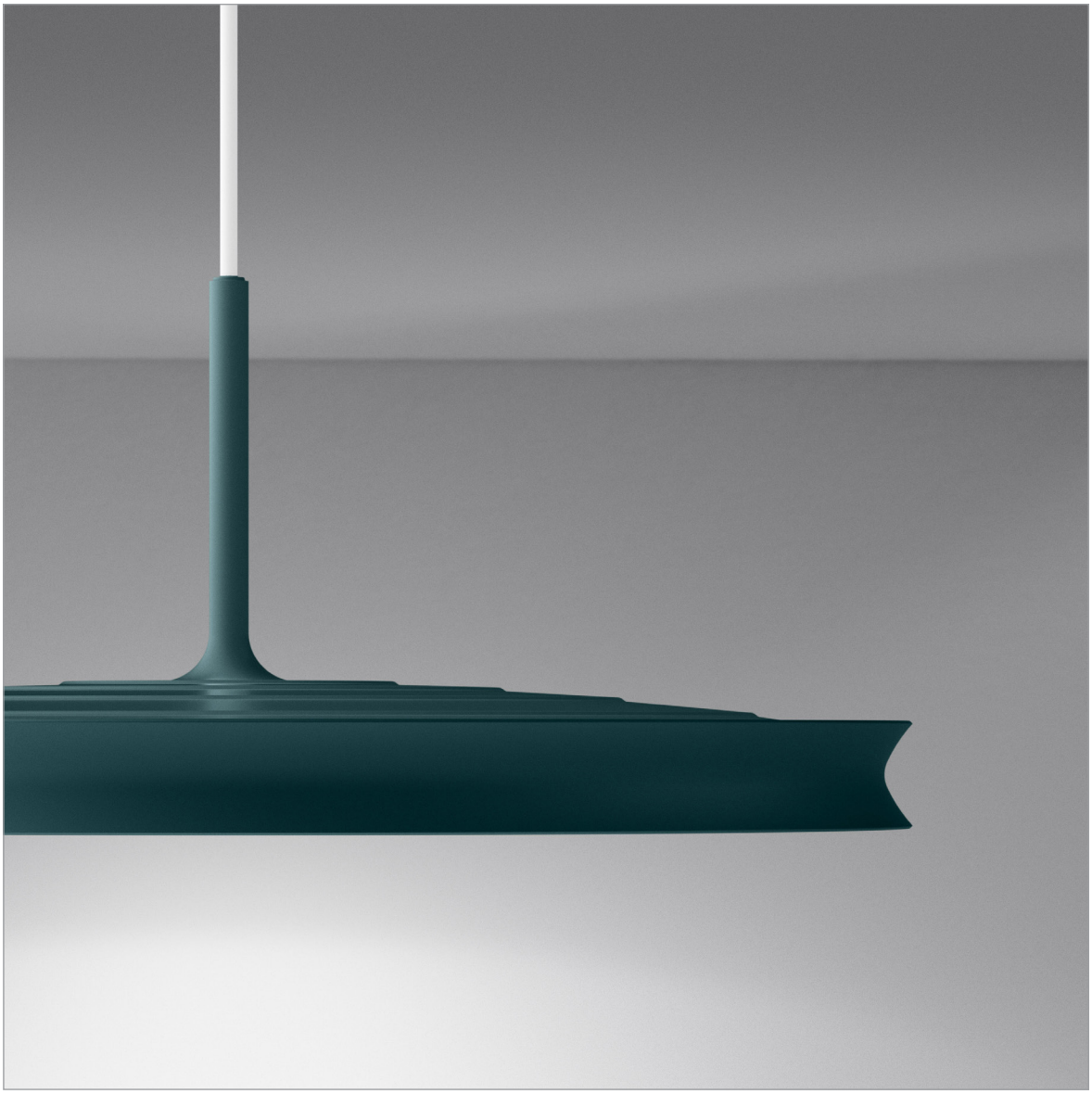

Yoyo is a range of elegant interior light fixtures with low height.

C.F. Møller Architects are the masters of Yoyo's elegant design with distinct curves and slim profiles. Concluded by sharp profiles at both ends, the characteristic parable results in a unique and sculptural look and the impression of a floating luminaire.

Being edge lit the Yoyo fixtures are free from dots and shadows from other components. The light from the edge is guided through the LGP and sent downwards by the top reflector.

Shades for Yoyo are opalised or microprismatic, and the latter is elegant without visible prisms.

Types:
For wall or ceiling, uplight optional
Pendants

Sizes:
Diameter: 13,76in and 21,13in
Diameter pendant: 13,76in and 21,13in

Finish:
Various RAL colours

Lighting:
LED: Edge Lit, exchangable
Top reflector + light guide plate (LGP)

F-L LIGHTING

FOCUS LIGHTING A/S · Kokkedal Industripark 40 · DK-2980 Kokkedal · Tel 4914 8080 · www.focus-lighting.dk · focus@focus-lighting.dk
NEO Architectural Lighting LLC · PO BOX 266678 · Tel +1 (954) 349-2525 · www.neolighting.com · info@neolighting.com

YOYO 535 PENDANT

Design: C.F. Møller Architects



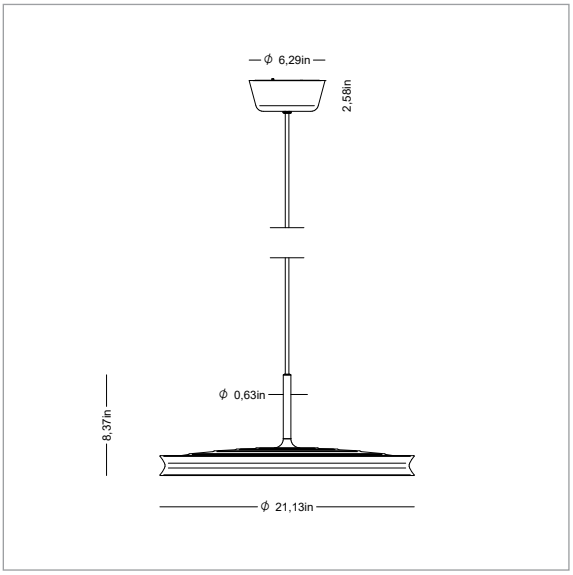

Luminaire specification:

Material:	Cast aluminium
Surface:	RAW Untreated
	RAW Anodized
	White RAL 9010
	Black RAL 9005
	Alu-grey RAL 9006
	Yellow RAL1032
	Orange RAL 2003
	Blue green RAL 6004
	Squirrel grey RAL 7000
	Other RAL colors
Shade:	Acrylate (PMMA), Opal
Lead:	PVC 2x18AWG
Classification:	class I, cULus; Damp Location
IP rating:	IP20
Weight:	9,9 lbs

LED and driver specification:

LED:	Edge Lit
Total consumption:	50 W
Operational life:	min 50,000 hours at ta 25°C
	L80B10
Color rendering:	CRI 90
Color accuracy:	3 Steps SDCM
Driver:	1000 mA,
Dimming:	0 - 10V
Operational life:	50,000 hours

F-L LIGHTING

FOCUS LIGHTING A/S · Kokkedal Industripark 40 · DK-2980 Kokkedal · Tel 4914 8080 · www.focus-lighting.dk · focus@focus-lighting.dk
NEO Architectural Lighting LLC · PO BOX 266678 · Tel +1 (954) 349-2525 · www.neolighting.com · info@neolighting.com

YOYO 535 - PENDANT WITH UPLIGHT

Design: C.F. Møller Architects



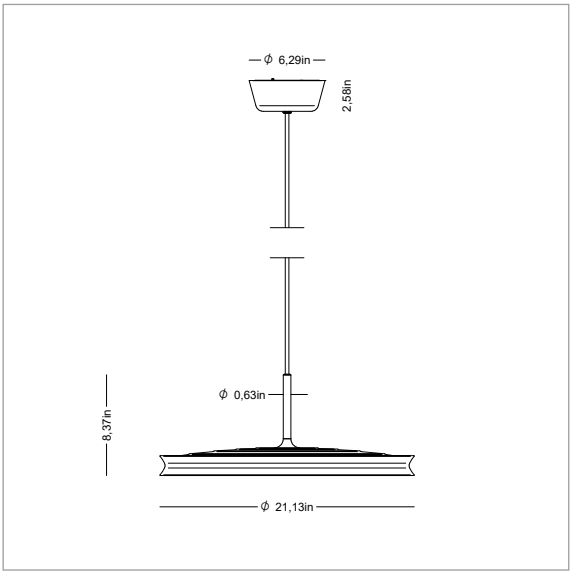

Luminaire specification:

Material:	Cast aluminium
Surface:	RAW Untreated
	RAW Anodized
	White RAL 9010
	Black RAL 9005
	Alu-grey RAL 9006
	Yellow RAL1032
	Orange RAL 2003
	Blue green RAL 6004
	Squirrel grey RAL 7000
	Other RAL colors
Shade:	Acrylate (PMMA), Opal
Lead:	PVC 2x18AWG
Classification:	class I, cULus; Damp Location
IP rating:	IP20
Weight:	9,9 lbs

LED and driver specification:

LED:	Edge Lit
Total consumption:	50 W
Operational life:	min 50,000 hours at ta 25°C
	L80B10
Color rendering:	CRI 90
Color accuracy:	3 Steps SDCM
Driver:	1000 mA,
Dimming:	0 - 10V
Operational life:	50,000 hours

F-L LIGHTING

FOCUS LIGHTING A/S · Kokkedal Industripark 40 · DK-2980 Kokkedal · Tel 4914 8080 · www.focus-lighting.dk · focus@focus-lighting.dk
NEO Architectural Lighting LLC · PO BOX 266678 · Tel +1 (954) 349-2525 · www.neolighting.com · info@neolighting.com

Spec sheet – Yoyo Pendant 535

Product number

Product no	Light source
US1852	No uplight
US1859	With uplight

Variant

Wattage	Color	Color Temperature
40W 40W	0 RAW Untreated	927 2700K, CRI90
	01 RAW Anodized	930 3000K, CRI90
	1 White RAL 9010	940 4000K, CRI90
	3 Black RAL 9005	
	19 Alu-grey RAL 9006	
	102 Yellow RAL1032	
	103 Orange RAL 2003	
	104 Blue green RAL 6004	
	105 Squirrel grey RAL 7000	
	RAL Other colors	

Optional

Controls	Protection class
Standard 0-10V	Standard 120-277V (60Hz)

Variant info

Wattage	2700K		3000K		4000K		lm/W
	Lumen	BUG	Lumen	BUG	Lumen	BUG	
Item no: US1852							
40W	3743 lm		3883 lm		4206 lm		94-105
Item no: US1859							
40W	2961 lm		3071 lm		3327 lm		74-83